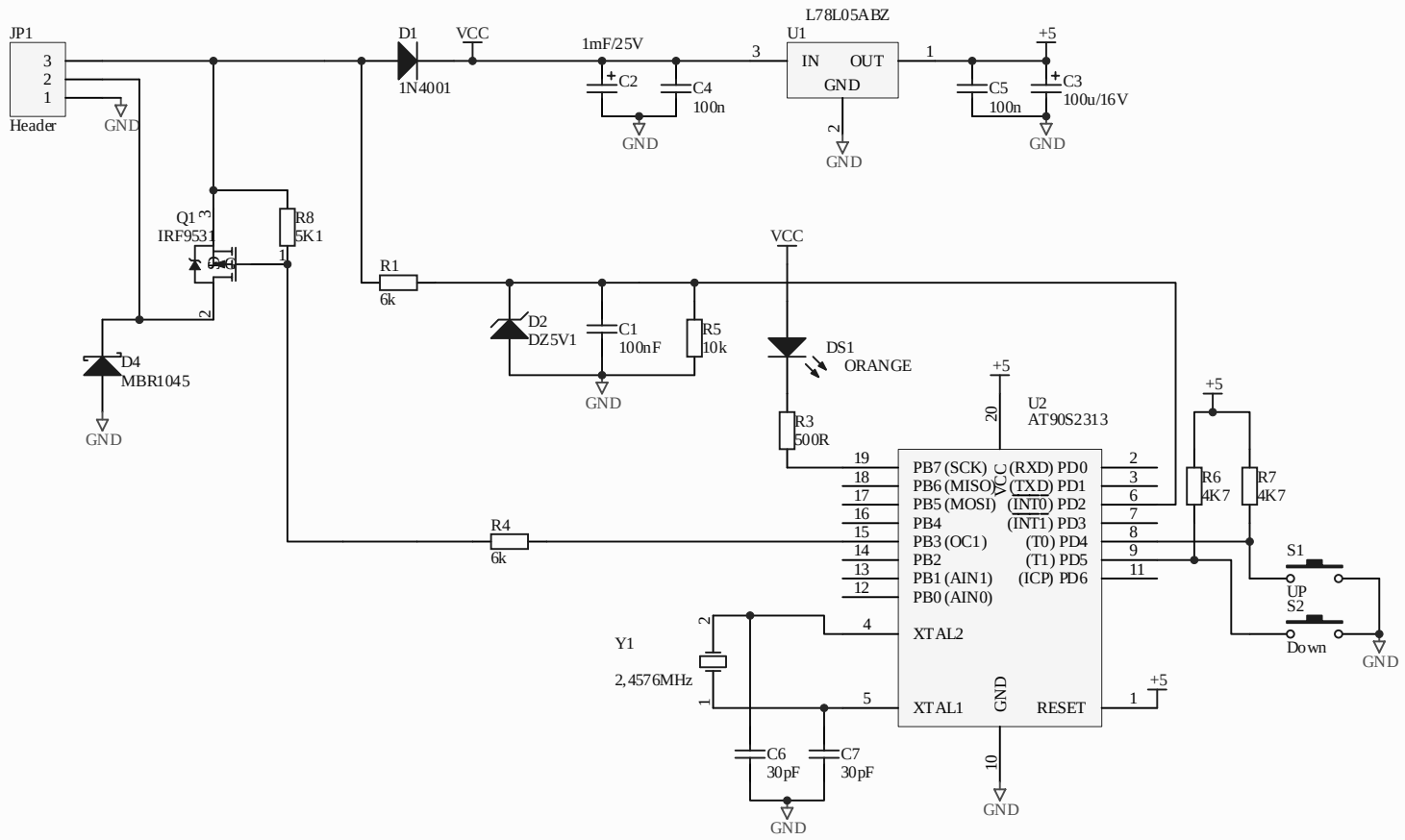


| | | |
|---|---|---|
| Title | PWM Regulator for DC 12V Motor | |
| Size A4 | Number | Revision 1.0 |
| Date: 2005-02-13 | Sheet of | |
| File: D:\Documents and Settings\..\Sheet1.SchDoc | Drawn By: Lucas | |